# Users Are Known by the Company They Keep: Topic Models for Viewpoint Discovery in Social Networks

**Thibaut Thonet** Guillaume Cabanac Mohand Boughanem Karen Pinel-Sauvagnat

IRIT, Université de Toulouse, CNRS

7 November 2017

# Motivation

- Massive amount of **opinions** on the Web
  $\Longrightarrow$ Need for **automated** methods to identify, classify and summarize opinions

- Traditional **opinion mining** research mainly focused on product/service review analysis
  $\Longrightarrow$ Identification of a review's **polarity** w.r.t. a target: **positive**/**negative**

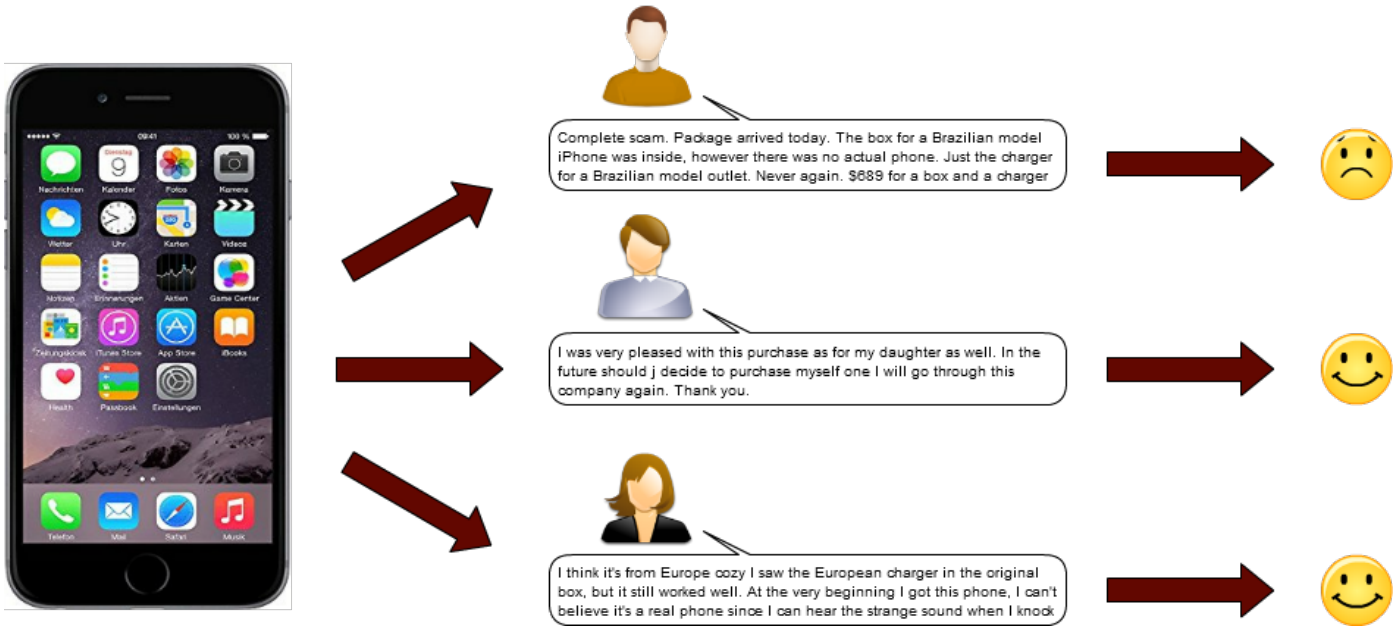


Images and reviews taken from Wikipedia and Amazon.com, February 2016.

# Motivation

. . . But **need** to go beyond plain positive/negative opinions $\Longrightarrow$ **viewpoint-based opinions**

E.g., to deal with **filter bubbles** [Pariser, 2011] & **echo chambers** [Sunstein, 2009]

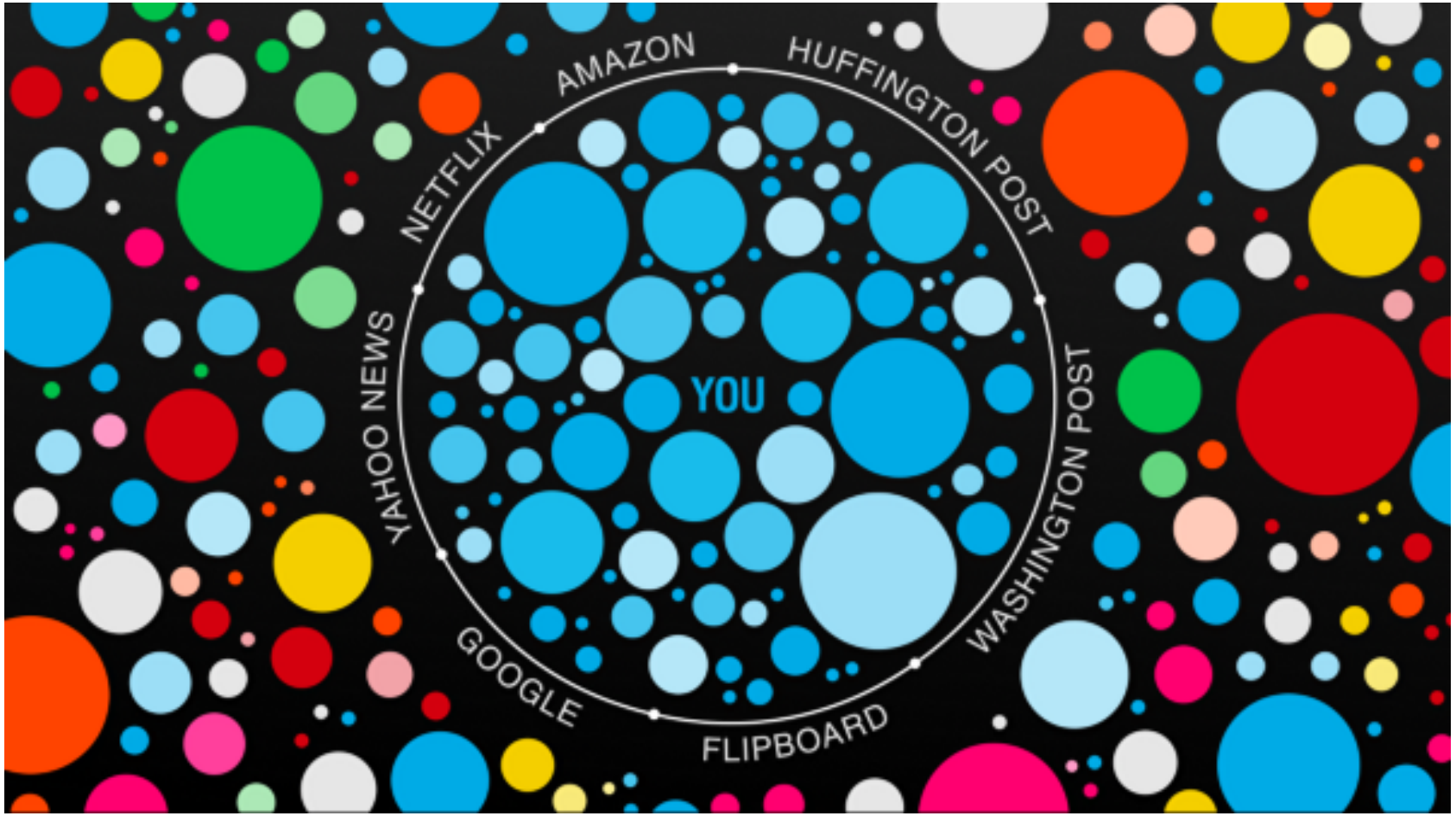


Image taken from wired.com, October 2017.

# Task

How to mitigate filter bubbles & echo chambers? $\Longrightarrow$ Build **unbiased viewpoint summaries**

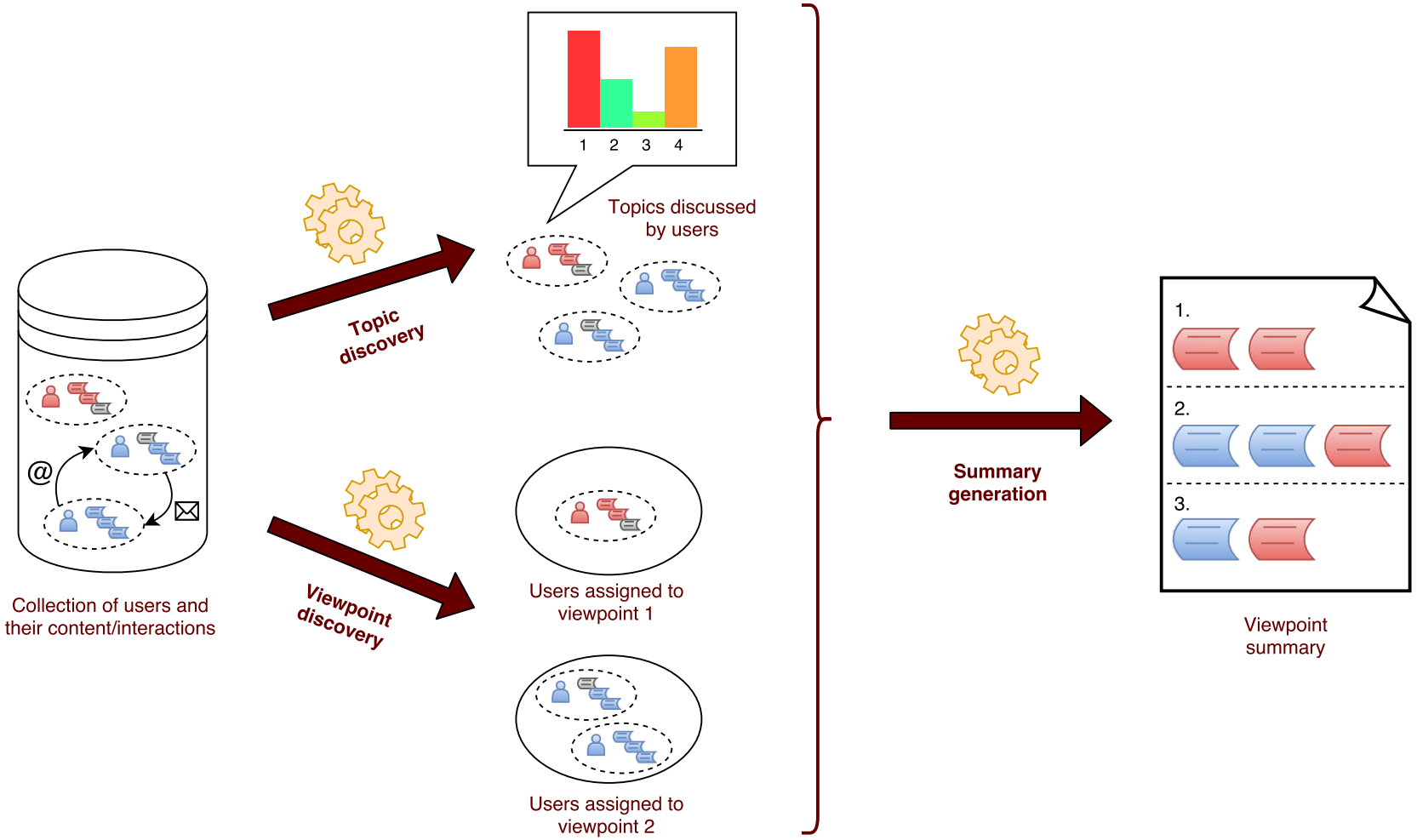

# Task

This work is the **first step**: discover **viewpoints** and **topics** from social networking data

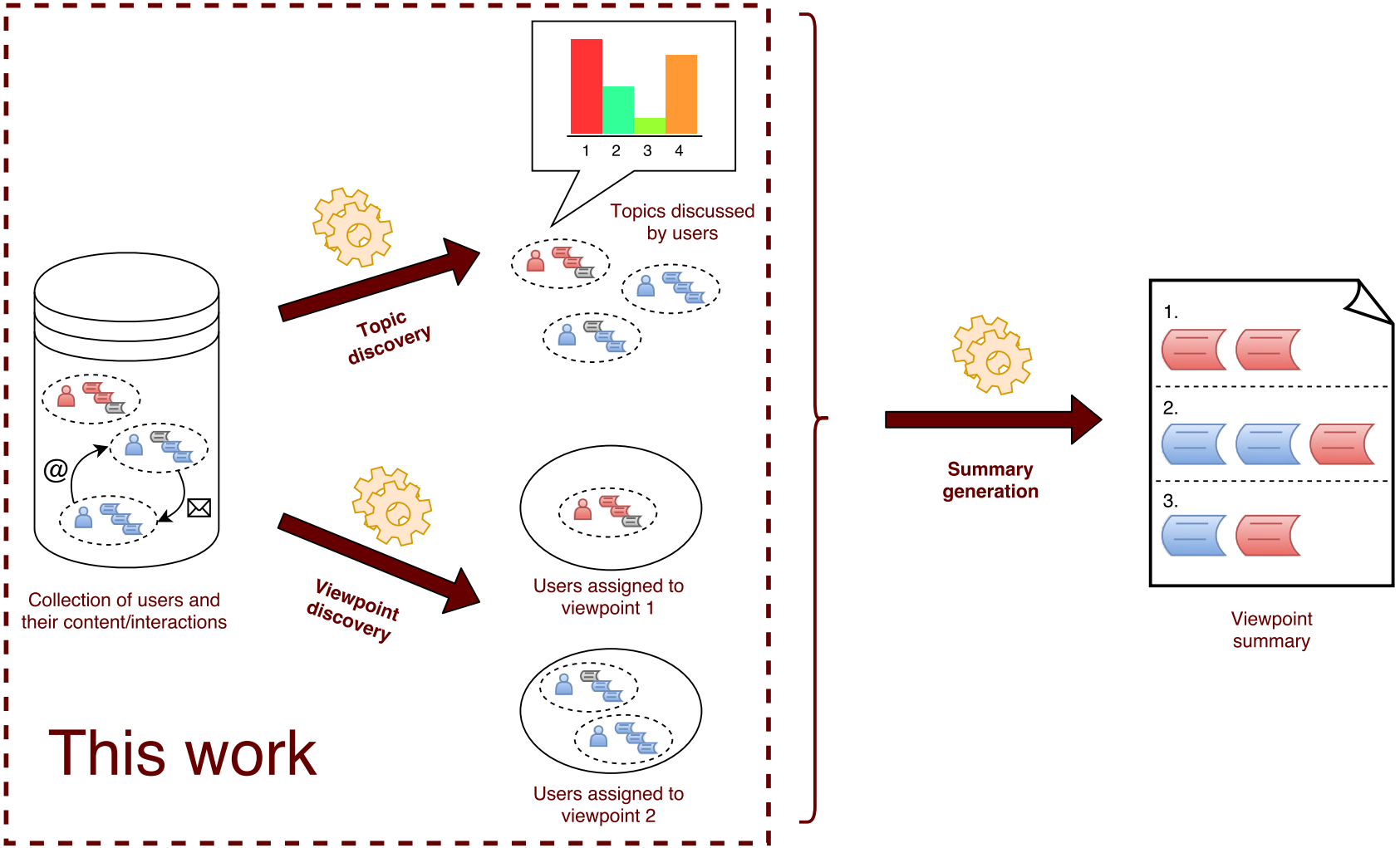

# SNVDM: The Social Network Viewpoint Discovery Model

We defined the **Social Network Viewpoint Discovery Model** to jointly discover topics and viewpoints from posted **text content** and **social interactions**

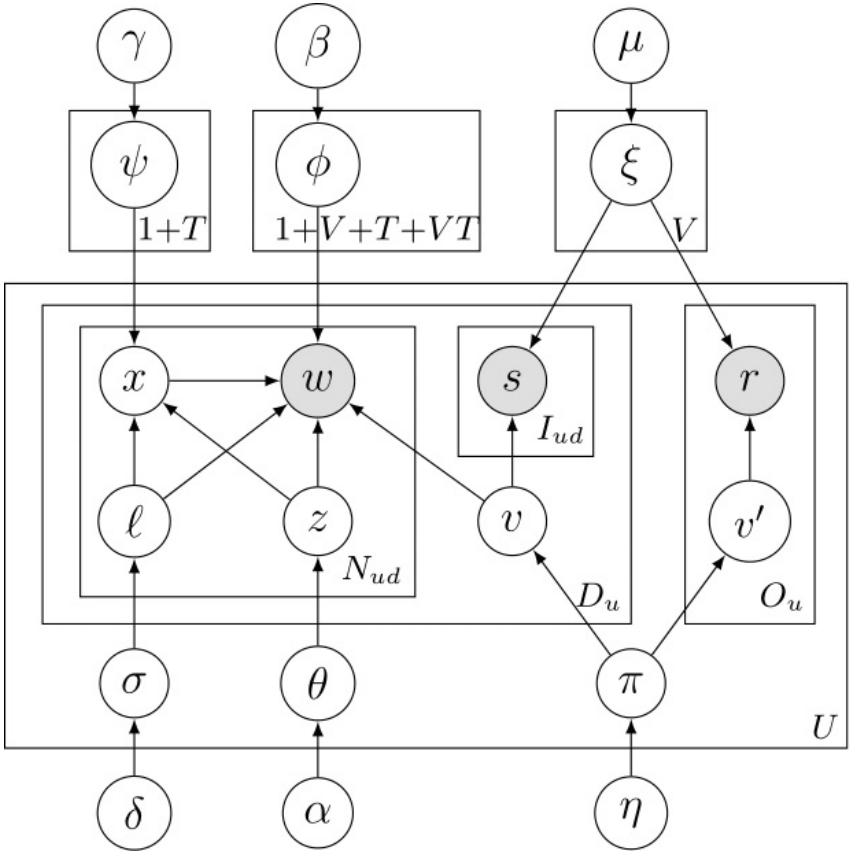

# SNVDM: The Social Network Viewpoint Discovery Model

We defined the **Social Network Viewpoint Discovery Model** to jointly discover topics and viewpoints from posted **text content** and **social interactions**

**Text content** component

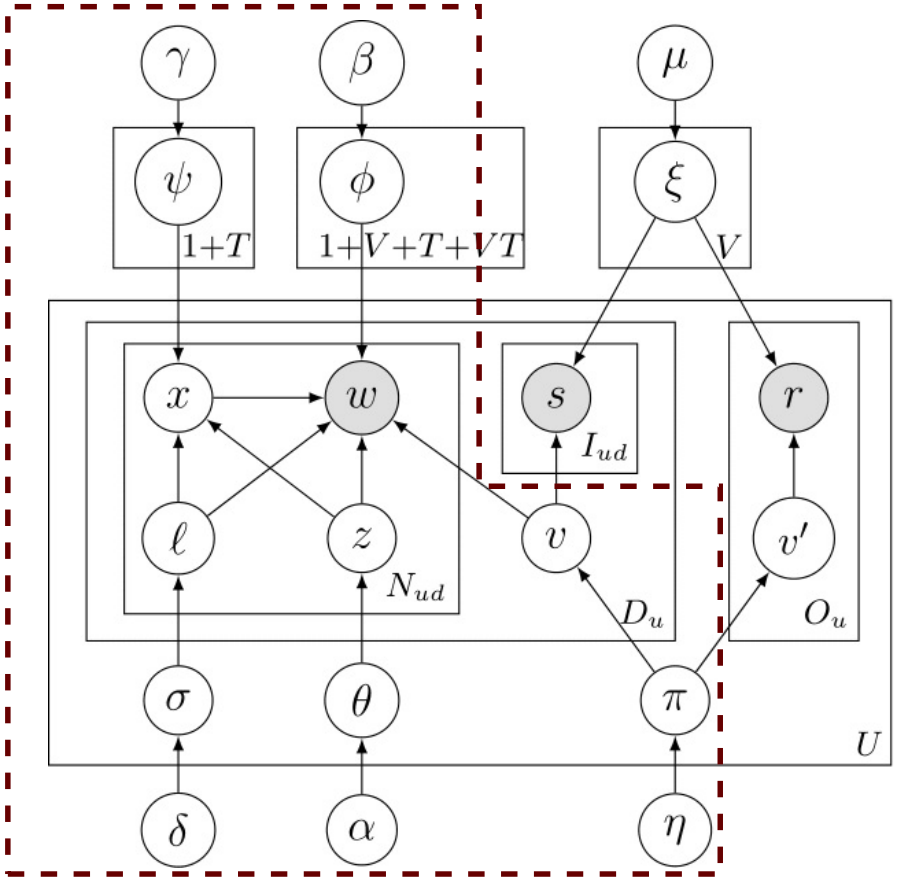

# SNVDM: The Social Network Viewpoint Discovery Model

We defined the **Social Network Viewpoint Discovery Model** to jointly discover topics and viewpoints from posted **text content** and **social interactions**

**Text content** component

- Observed data: **tokens** occurring in **documents** posted by **users** $\Longrightarrow$ 3 nested plates
- Latent **topics** assigned to each token
- Latent **viewpoints** assigned at **document-level**

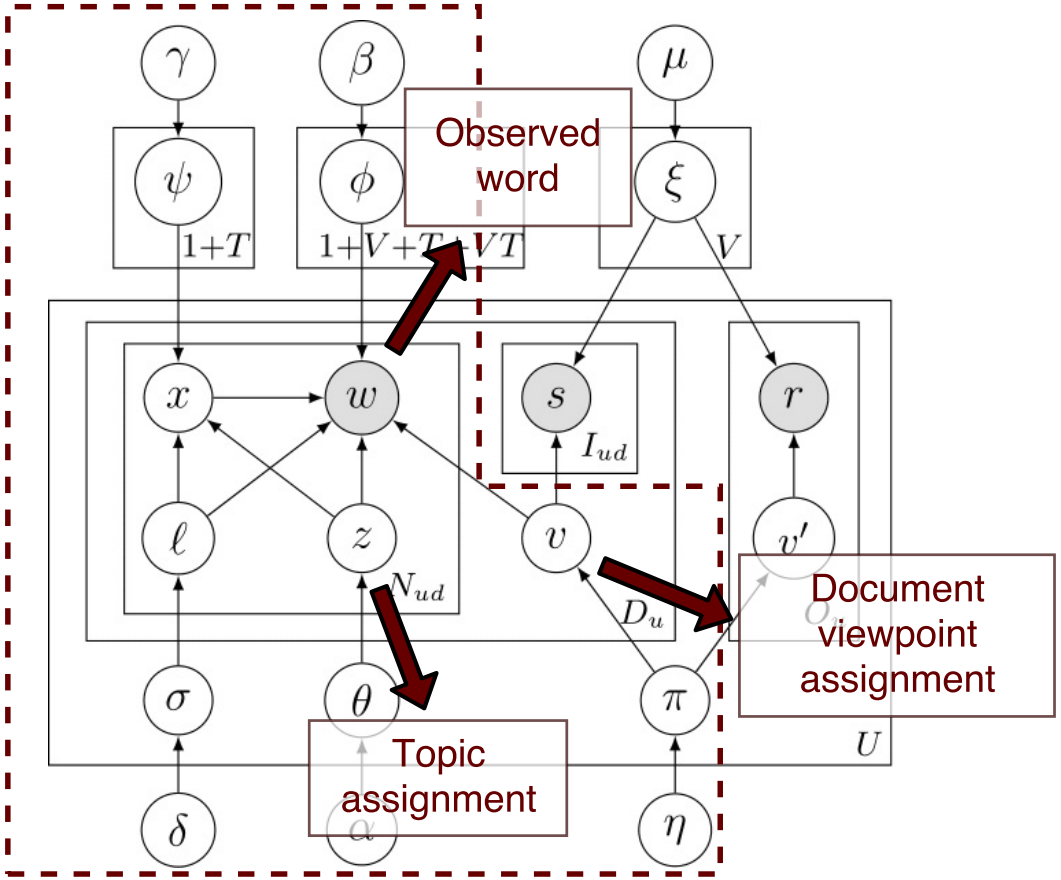

# SNVDM: The Social Network Viewpoint Discovery Model

We defined the **Social Network Viewpoint Discovery Model** to jointly discover topics and viewpoints from posted **text content** and **social interactions**

**Text content** component

Following the **Topic-Aspect Model** from [Paul+, AAAI '10], definition of **four word types** specified by switch variables $\ell$ (level) and $x$ (route):

- **Background** words $\Longrightarrow \ell = 0, x = 0$
- **Viewpoint** words $\Longrightarrow \ell = 0, x = 1$
- **Topic** words $\Longrightarrow \ell = 1, x = 0$
- **Viewpoint-topic** words $\Longrightarrow \ell = 1, x = 1$

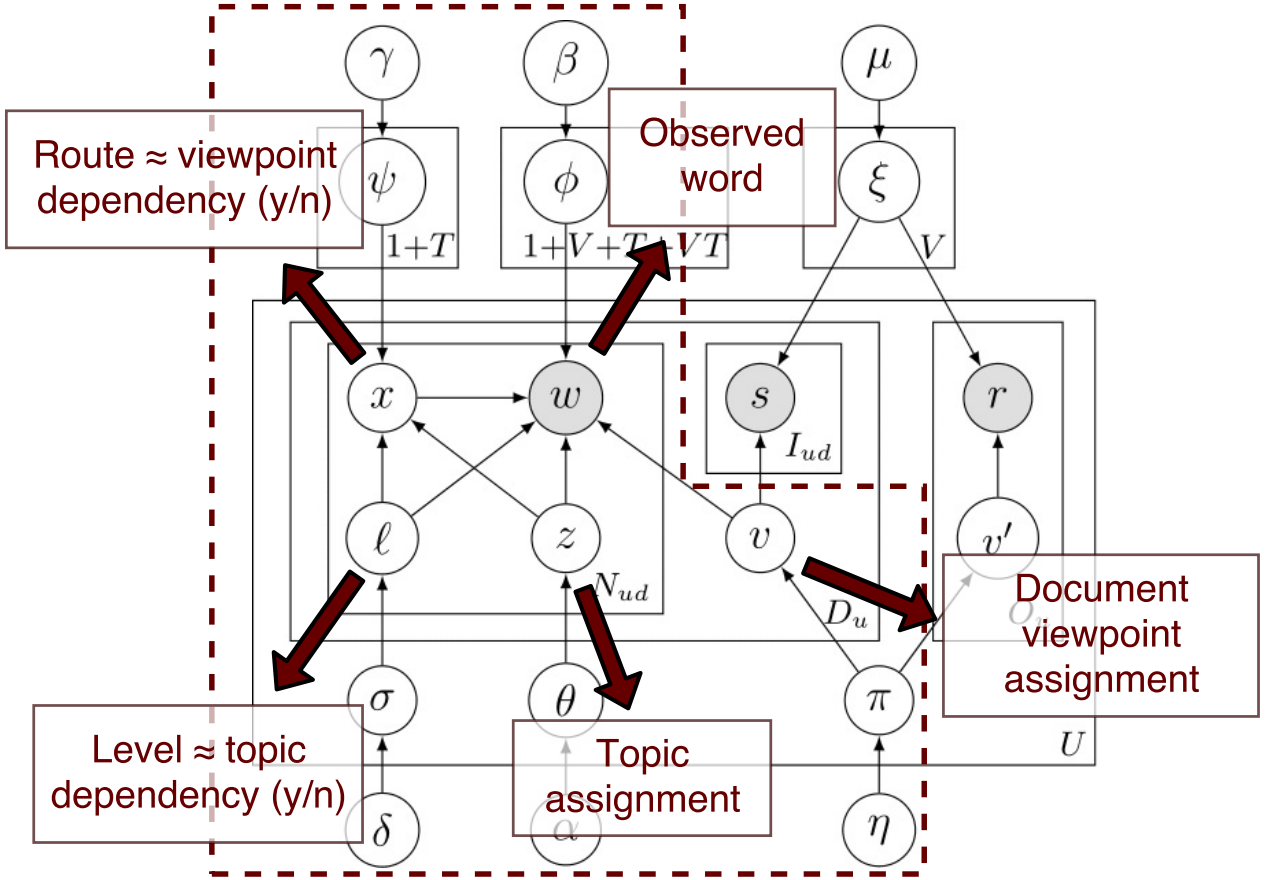

# SNVDM: The Social Network Viewpoint Discovery Model

We defined the **Social Network Viewpoint Discovery Model** to jointly discover topics and viewpoints from posted **text content** and **social interactions**

**Social interaction** component

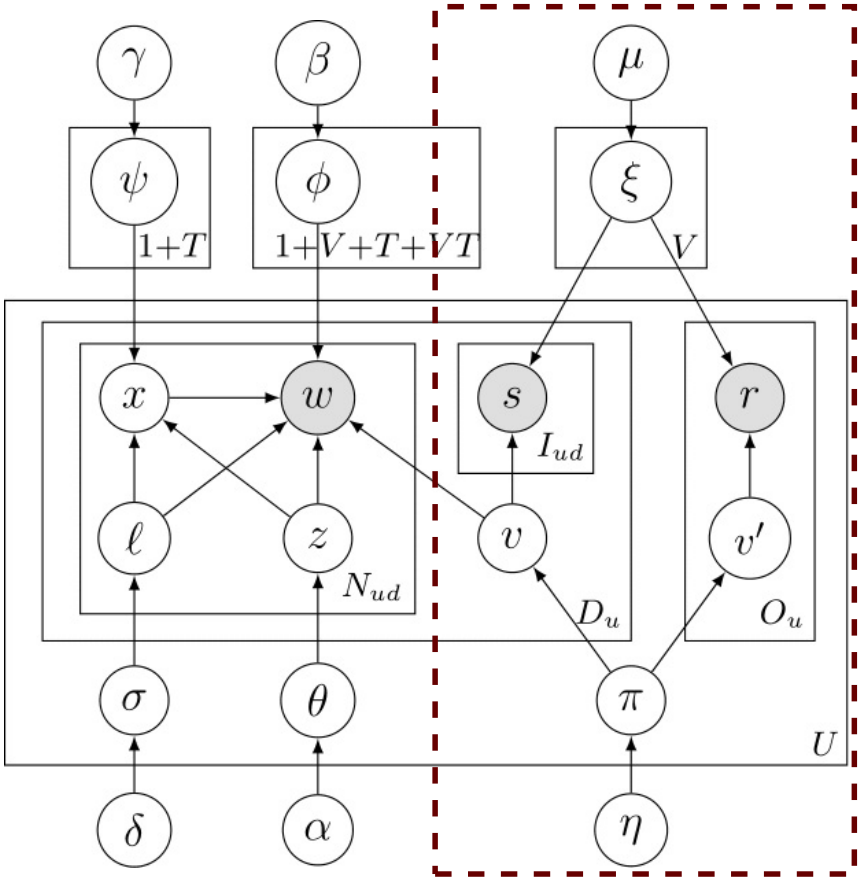

# SNVDM: The Social Network Viewpoint Discovery Model

We defined the **Social Network Viewpoint Discovery Model** to jointly discover topics and viewpoints from posted **text content** and **social interactions**

**Social interaction** component

**Outgoing interactions** for user $u$ = interactions initiated by $u$ on another user (**recipient** $r$)

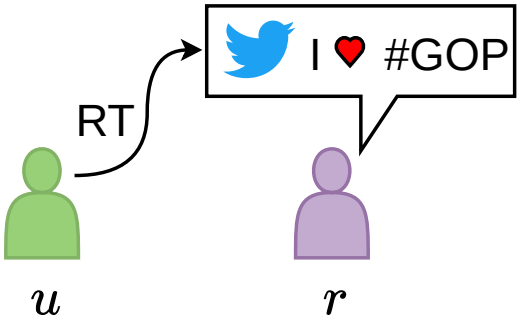


Following **SN-LDA** from [Sachan+, WSDM '14], viewpoints assigned to outgoing interactions (**homophily**)

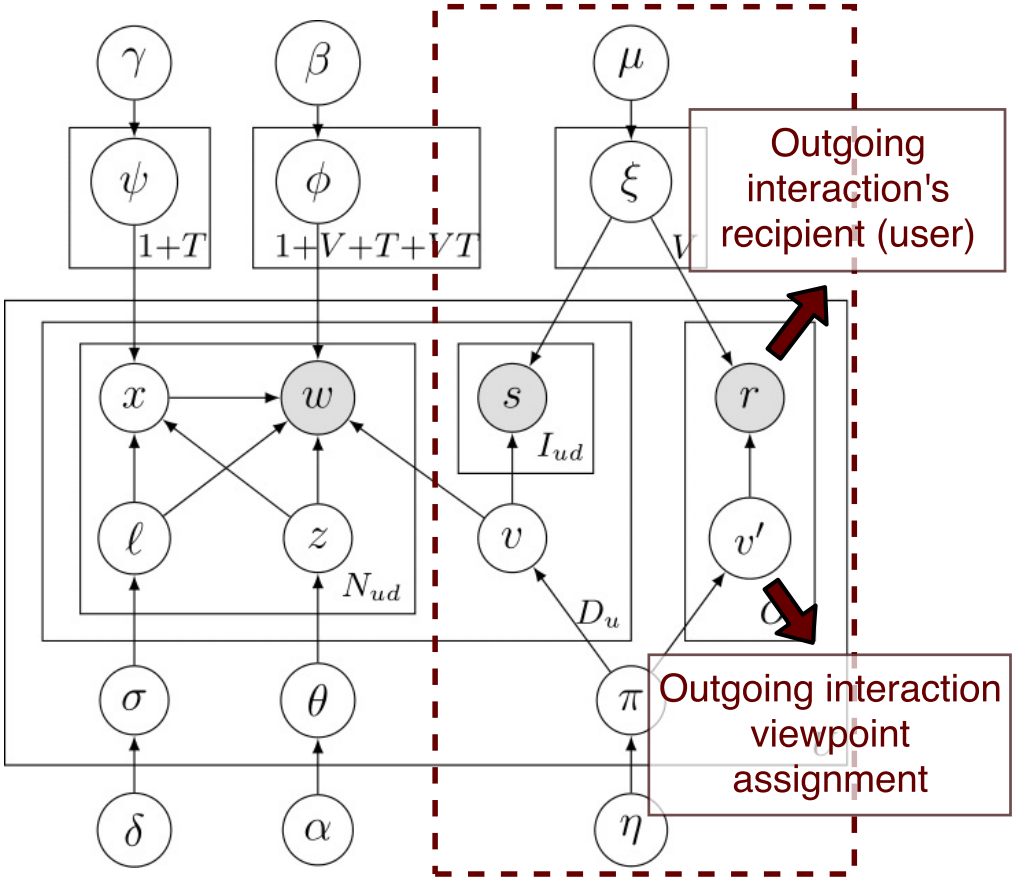

# SNVDM: The Social Network Viewpoint Discovery Model

We defined the **Social Network Viewpoint Discovery Model** to jointly discover topics and viewpoints from posted **text content** and **social interactions**

**Social interaction** component

. . . But outgoing interactions **insufficient** for some users

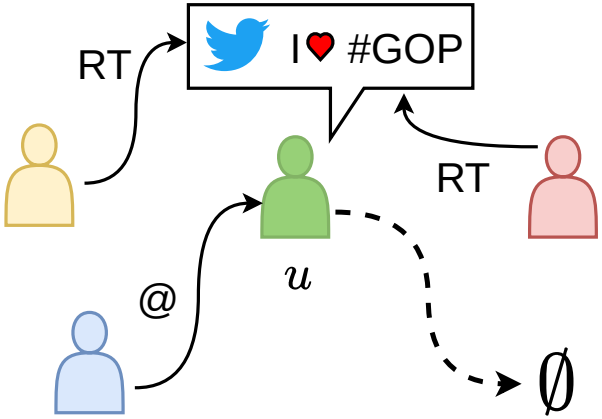


$\Longrightarrow$ We propose to also exploit **incoming interactions**

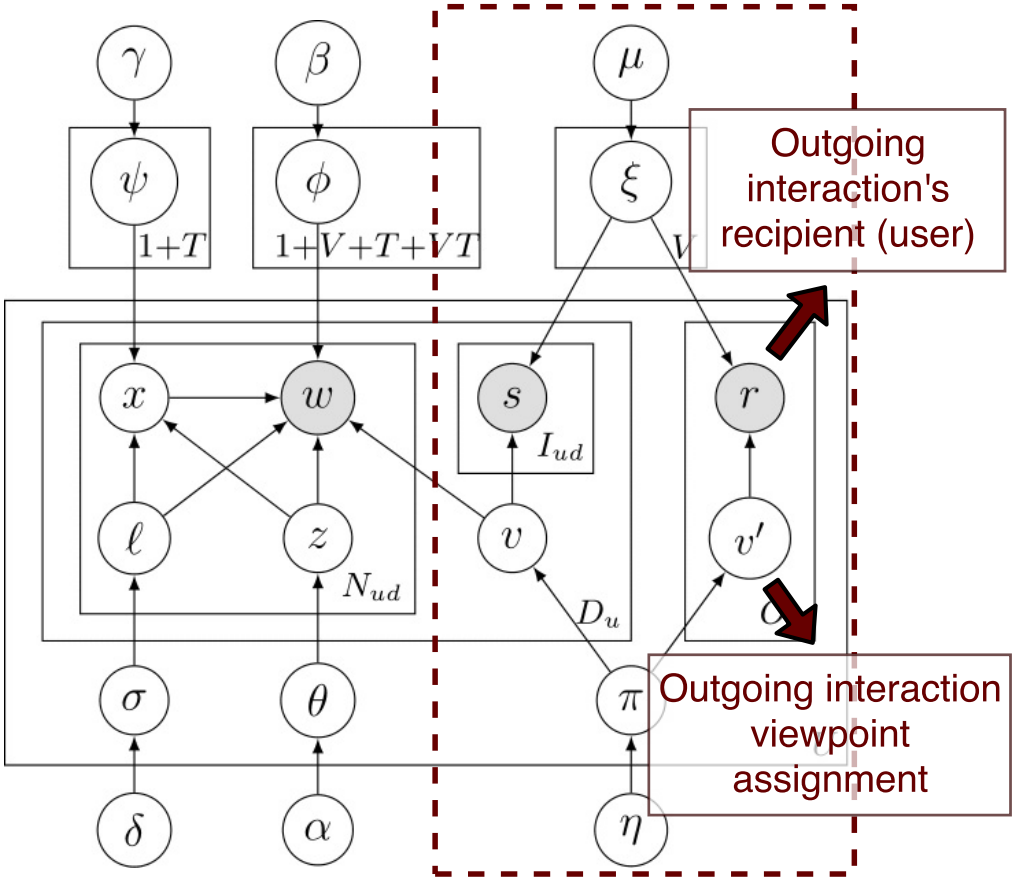

# SNVDM: The Social Network Viewpoint Discovery Model

We defined the **Social Network Viewpoint Discovery Model** to jointly discover topics and viewpoints from posted **text content** and **social interactions**

**Social interaction** component

**Incoming interactions** for user $u$ = interactions initiated by another user (**sender** $s$) on $u$

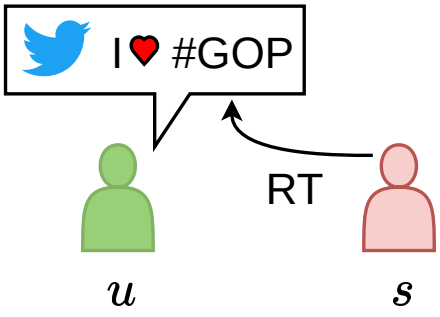


Viewpoint assigned to the **document** being interacted upon

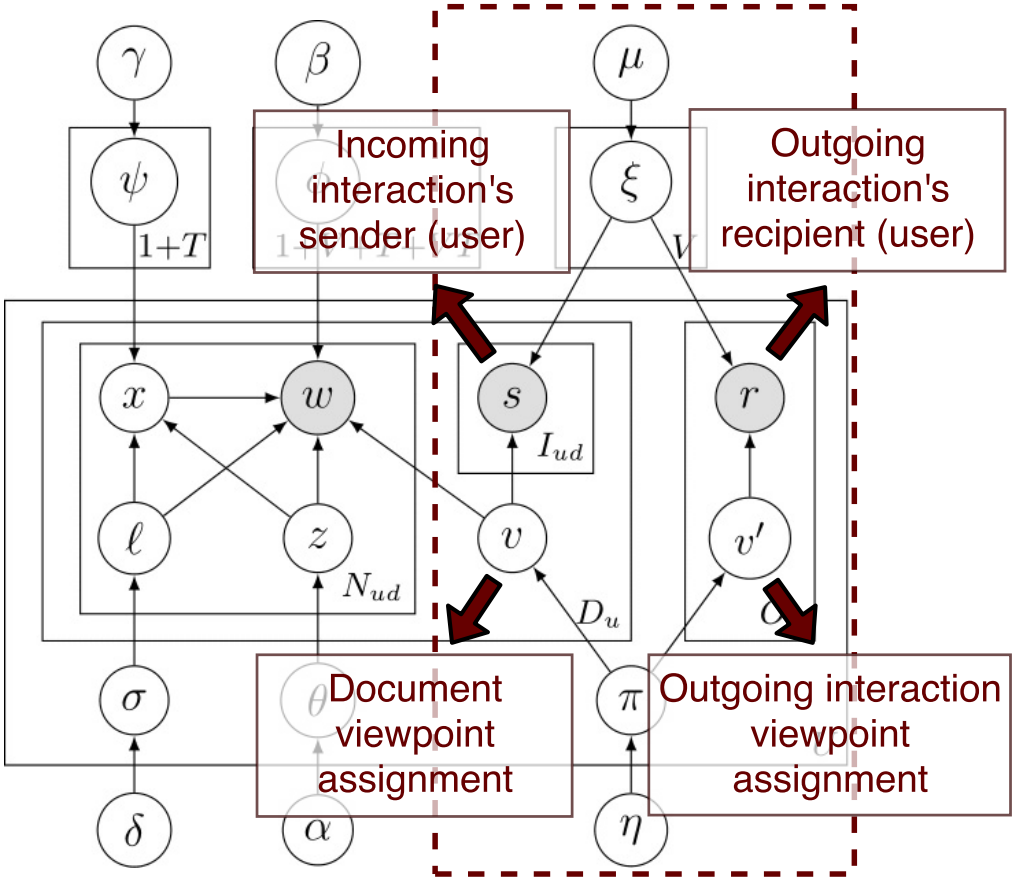

# SNVDM: The Social Network Viewpoint Discovery Model

We defined the **Social Network Viewpoint Discovery Model** to jointly discover topics and viewpoints from posted **text content** and **social interactions**

## Posterior inference

Approximate inference based on **Collapsed Gibbs Sampling**

- Dirichlet/Bernoulli distributions $\sigma$, $\psi$, $\theta$, $\pi$, $\phi$, $\xi$ **integrated out**
- Successively **sample** discrete latent variables $\ell$, $x$, $z$, $v$, $v'$ from their posterior distributions (i.e., given observations $w$, $s$, $r$)

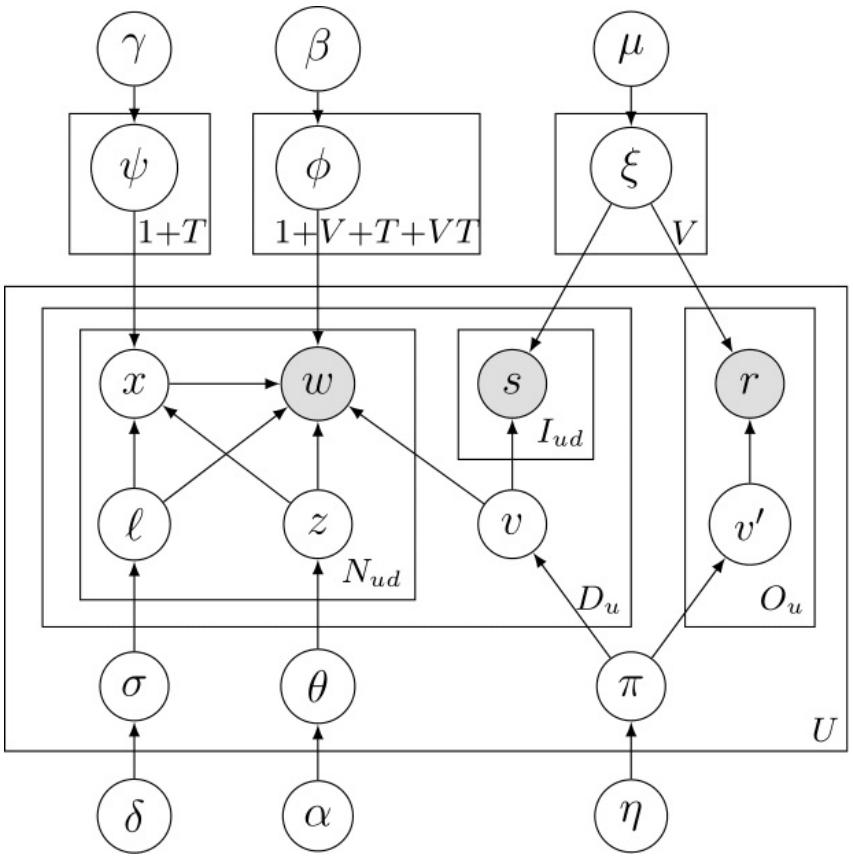

# Limits of SNVDM's Social Interaction Component

Some users have **very few social interactions**
$\Longrightarrow$ Difficult to identify their viewpoints based on scarce **direct** interactions

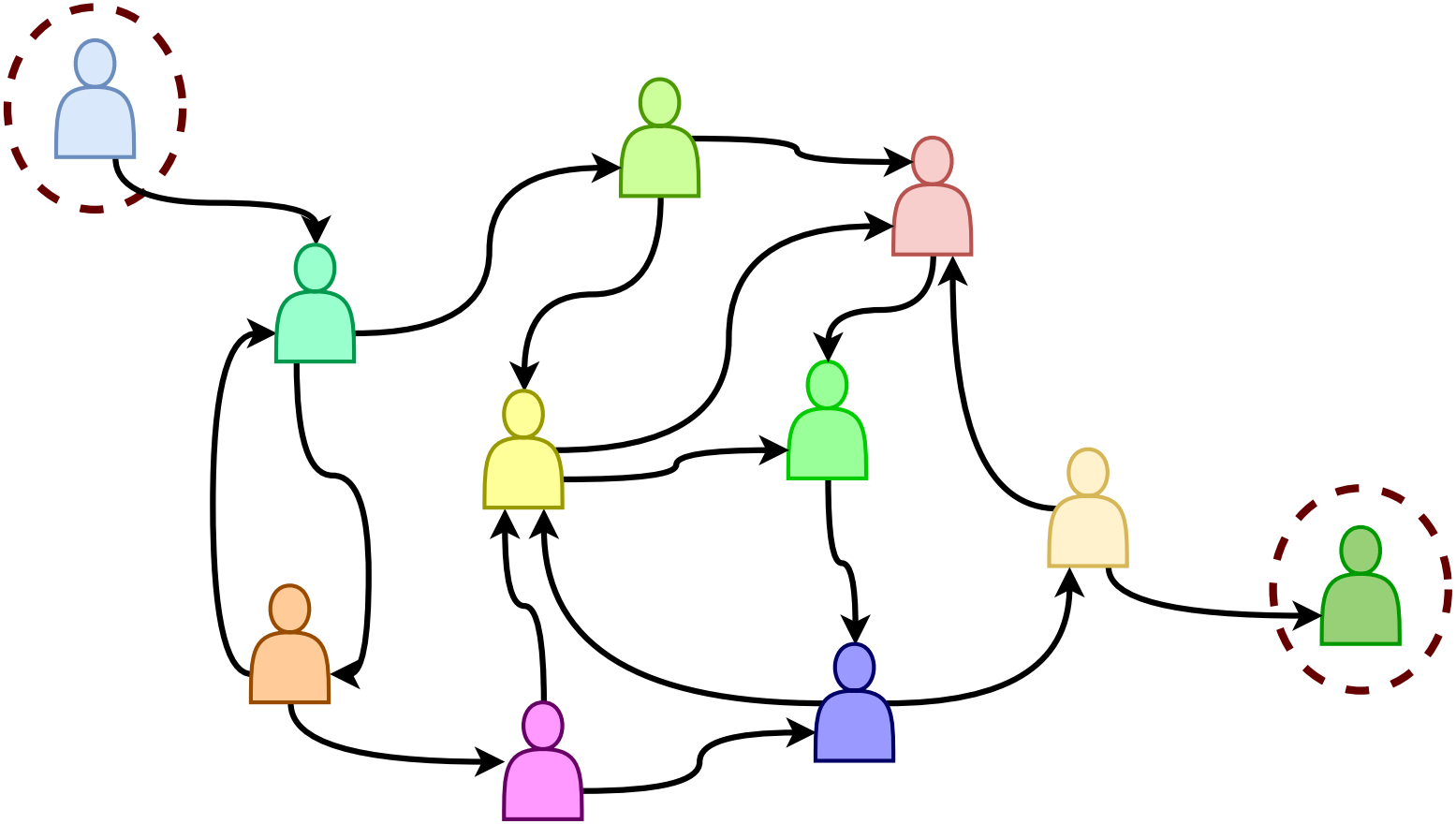

# Limits of SNVDM's Social Interaction Component

We propose to extend SNVDM to leverage "aquaintances of acquaintances" ($\approx$ friends of friends)
How? $\Longrightarrow$ **Generalized Pólya Urn** scheme

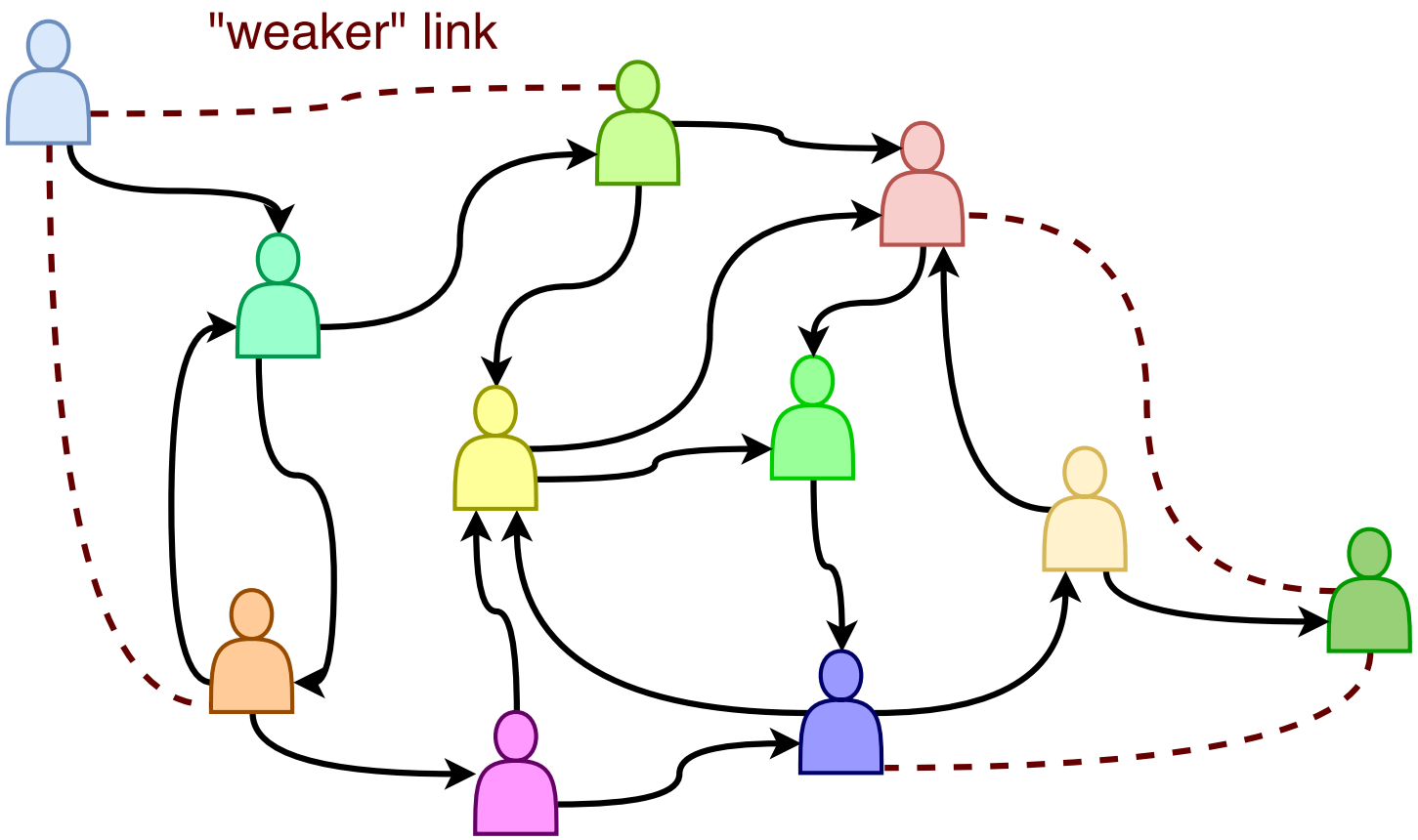

# SNVDM-GPU: Extension of SNVDM based on Generalized Pólya Urn

Using **Generalized Pólya Urn** in SNVDM requires minor changes in collapsed Gibbs sampling

E.g., for outgoing interaction $o$ from user $u$ on user $u'$:

$$p(v'_{uo} = v | r_{uo} = u', \text{rest}) \propto \frac{n_{uv} + \eta \frac{1}{V}}{n_{u\bullet} + \eta} \cdot \frac{\boldsymbol{n_{vu'}} + \mu \frac{1}{U}}{\boldsymbol{n_{v\bullet}} + \mu}$$

**SNVDM** vs . . .

$$p(v'_{uo} = v | r_{uo} = u', \text{rest}) \propto \frac{n_{uv} + \eta \frac{1}{V}}{n_{u\bullet} + \eta} \cdot \frac{\sum_{u''=1}^{U} \mathbb{A}_{u''u'} \boldsymbol{n_{vu''}} + \mu \frac{1}{U}}{\sum_{u''=1}^{U} \mathbb{A}_{u''\bullet} \boldsymbol{n_{vu''}} + \mu}$$

. . . **SNVDM-GPU**

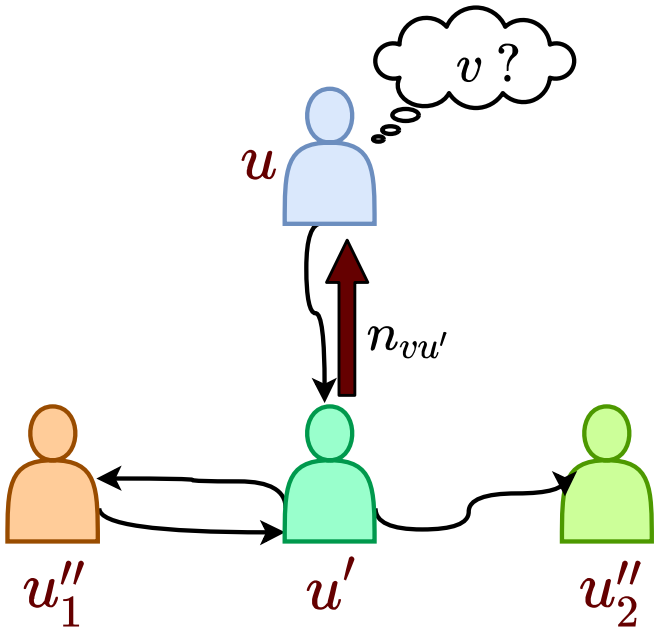


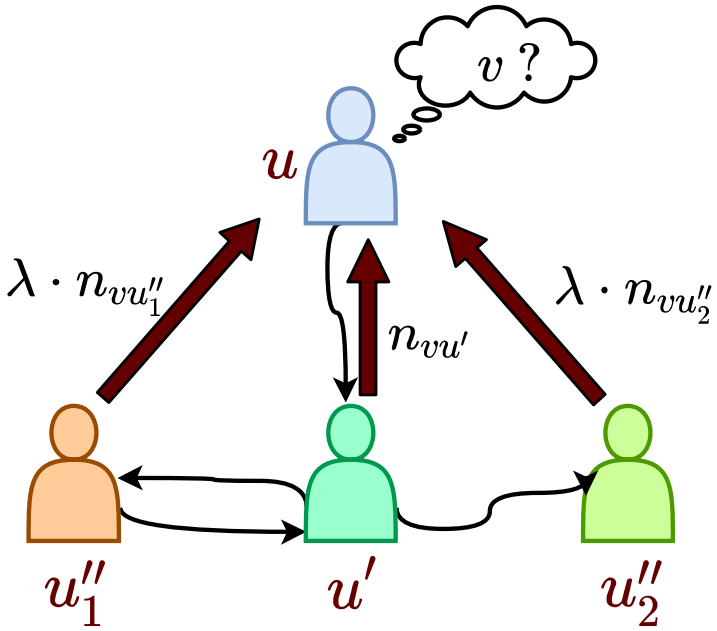

# Experimental Setup: Datasets & Evaluated Models

- **Twitter** datasets from [Brigadir+, WebSci '15] on the **2014 Scottish Independence Referendum** ($v$ = Yes/No) and the **2014 US Midterm Elections** ($v$ = Democrat/Republican)

| Dataset | #Users | | #Tweets | #Tokens | Vocabulary | #Interactions |
|---|---|---|---|---|---|---|
| | Yes/Dem. | No/Rep. | | | | |
| Indyref | 589 | 575 | 270,075 | 2,043,204 | 38,942 | 696,654 |
| Midterms | 767 | 778 | 113,545 | 975,199 | 25,312 | 241,741 |

# Experimental Setup: Datasets & Evaluated Models

- **Twitter** datasets from [Brigadir+, WebSci '15] on the **2014 Scottish Independence Referendum** ($v$ = Yes/No) and the **2014 US Midterm Elections** ($v$ = Democrat/Republican)

| Dataset | #Users | | #Tweets | #Tokens | Vocabulary | #Interactions |
|---|---|---|---|---|---|---|
| | Yes/Dem. | No/Rep. | | | | |
| Indyref | 589 | 575 | 270,075 | 2,043,204 | 38,942 | 696,654 |
| Midterms | 767 | 778 | 113,545 | 975,199 | 25,312 | 241,741 |

- State-of-the-art baselines:
  - **Topic-Aspect Model** (TAM) from [Paul+, AAAI '10]
    $\Longrightarrow$ **Only text content** to discover viewpoints and topics
  - **Social Network Latent Dirichlet Allocation** (SN-LDA) from [Sachan+, WSDM '14]
    $\Longrightarrow$ **Text content** and **outgoing interactions** to discover **communities** ($\approx$ viewpoints) and topics
  - **Viewpoint and Opinion Discovery Unification Model** (VODUM) from [Thonet+, ECIR '16]
    $\Longrightarrow$ **Text content** to discover viewpoints and topics, and **parts of speech** to distinguish between topic words and viewpoint-topic words

# Experimental Setup: Datasets & Evaluated Models

- **Twitter** datasets from [Brigadir+, WebSci '15] on the **2014 Scottish Independence Referendum** ($v$ = Yes/No) and the **2014 US Midterm Elections** ($v$ = Democrat/Republican)

| Dataset | #Users | | #Tweets | #Tokens | Vocabulary | #Interactions |
|---|---|---|---|---|---|---|
| | Yes/Dem. | No/Rep. | | | | |
| Indyref | 589 | 575 | 270,075 | 2,043,204 | 38,942 | 696,654 |
| Midterms | 767 | 778 | 113,545 | 975,199 | 25,312 | 241,741 |

- State-of-the-art baselines:
  - **Topic-Aspect Model** (TAM) from [Paul+, AAAI '10]
  - **Social Network Latent Dirichlet Allocation** (SN-LDA) from [Sachan+, WSDM '14]
  - **Viewpoint and Opinion Discovery Unification Model** (VODUM) from [Thonet+, ECIR '16]
- Proposed models:
  - **SNVDM**
  - **SNVDM-GPU ($\tau = 10$)**: only **10 most interacting acquaintances** used in Generalized Pólya Urns
  - **SNVDM-GPU ($\tau = \infty$)**: **all acquaintances** used in Generalized Pólya Urns

# Evaluation: Viewpoint Clustering

**Clustering** of users' viewpoints on **Indyref** in terms of **Purity** and **NMI** (error bars = 95% CI)

Observation 1: consistent results across different numbers of topics

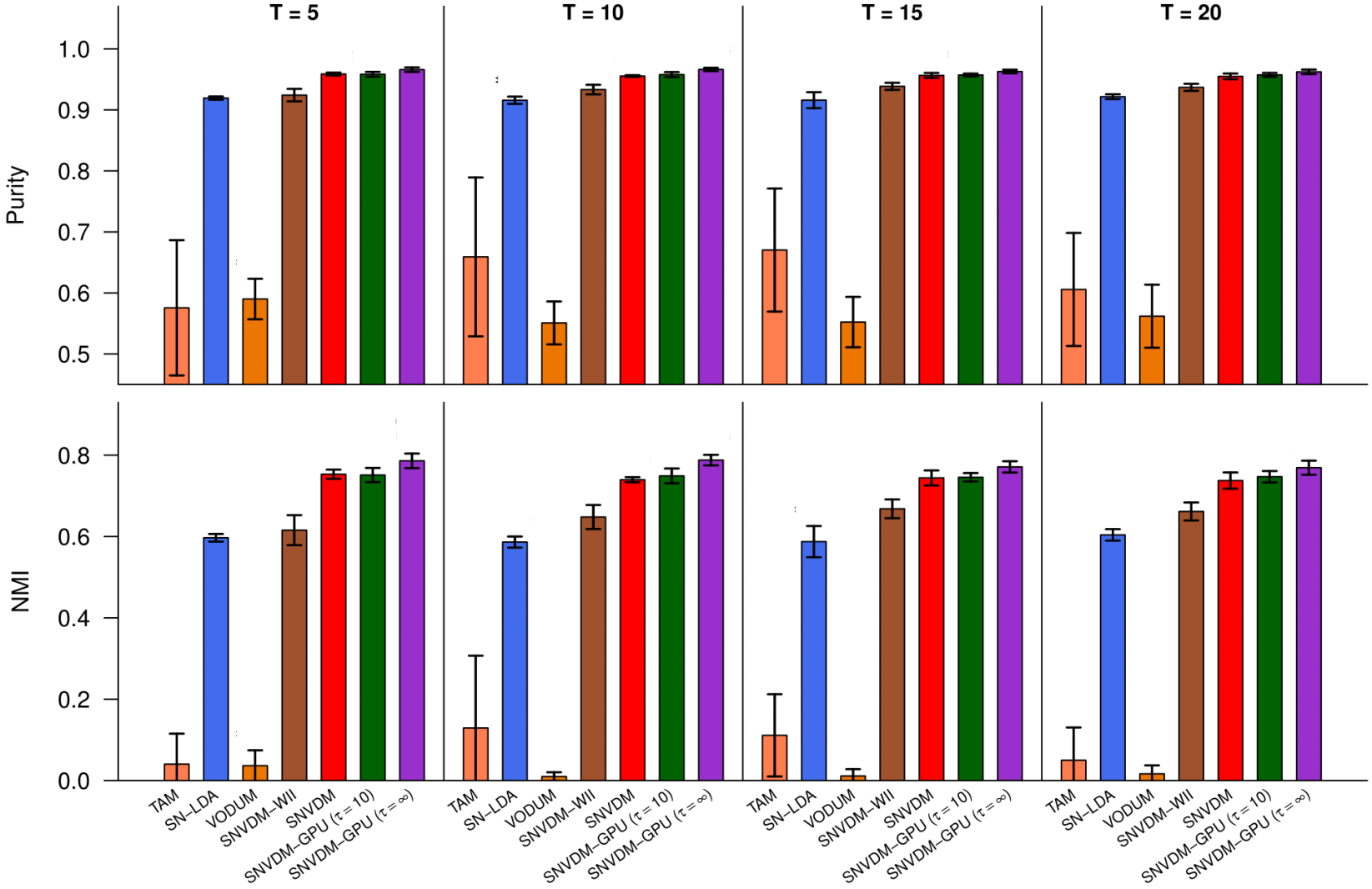

# Evaluation: Viewpoint Clustering

**Clustering** of users' viewpoints on **Indyref** in terms of **Purity** and **NMI** (error bars = 95% CI)

Observation 2: **SNVDM**, **SNVDM-GPU** ($\tau = 10$), **SNVDM-GPU** ($\tau = \infty$) $>$ all baselines

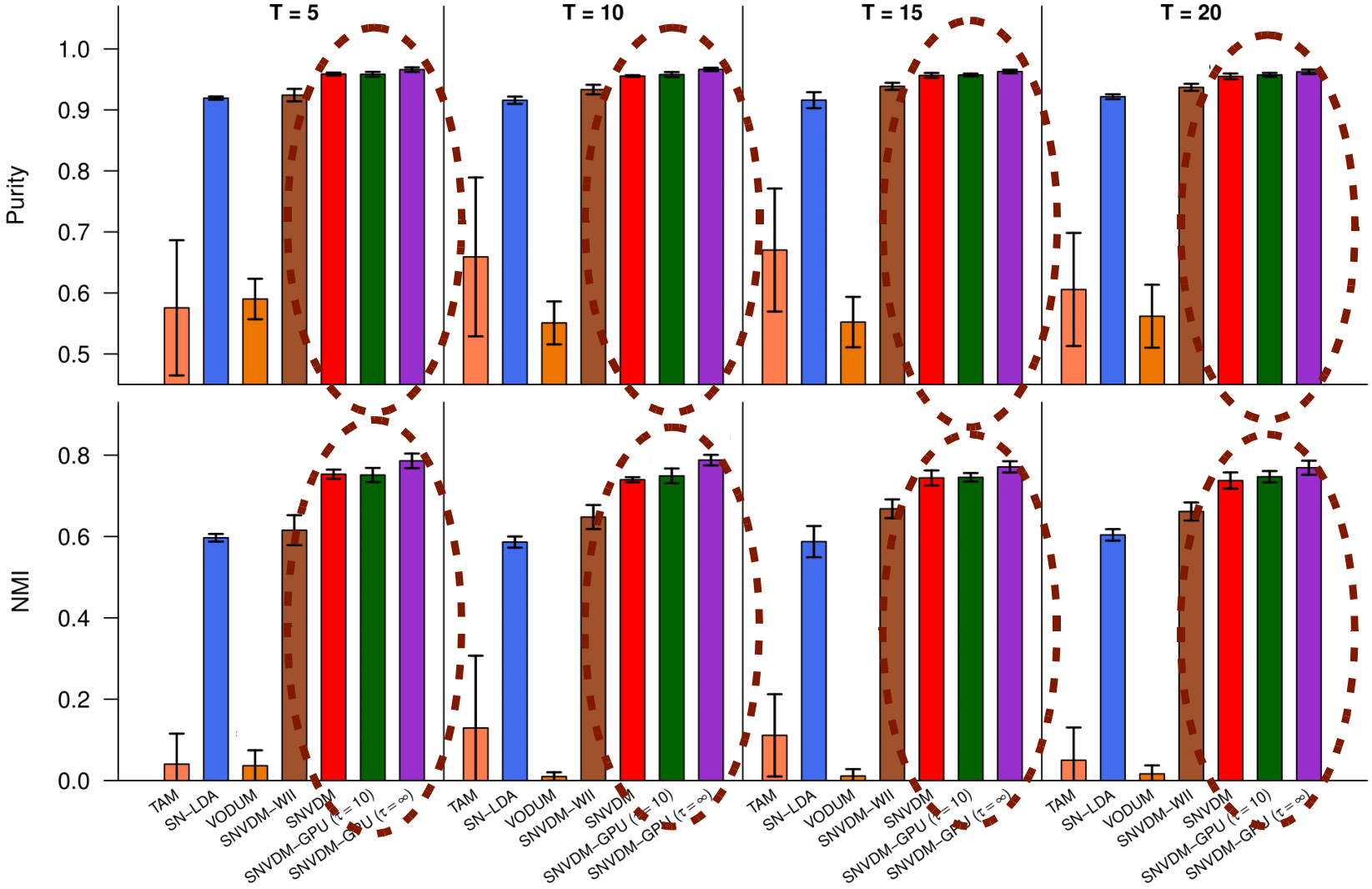

# Evaluation: Viewpoint Clustering

**Clustering** of users' viewpoints on **Indyref** in terms of **Purity** and **NMI** (error bars = 95% CI)

Observation 3: **SNVDM-GPU** ($\tau = \infty$) $>$ **SNVDM-GPU** ($\tau = 10$) $>$ **SNVDM** $\Longrightarrow$ GPU beneficial

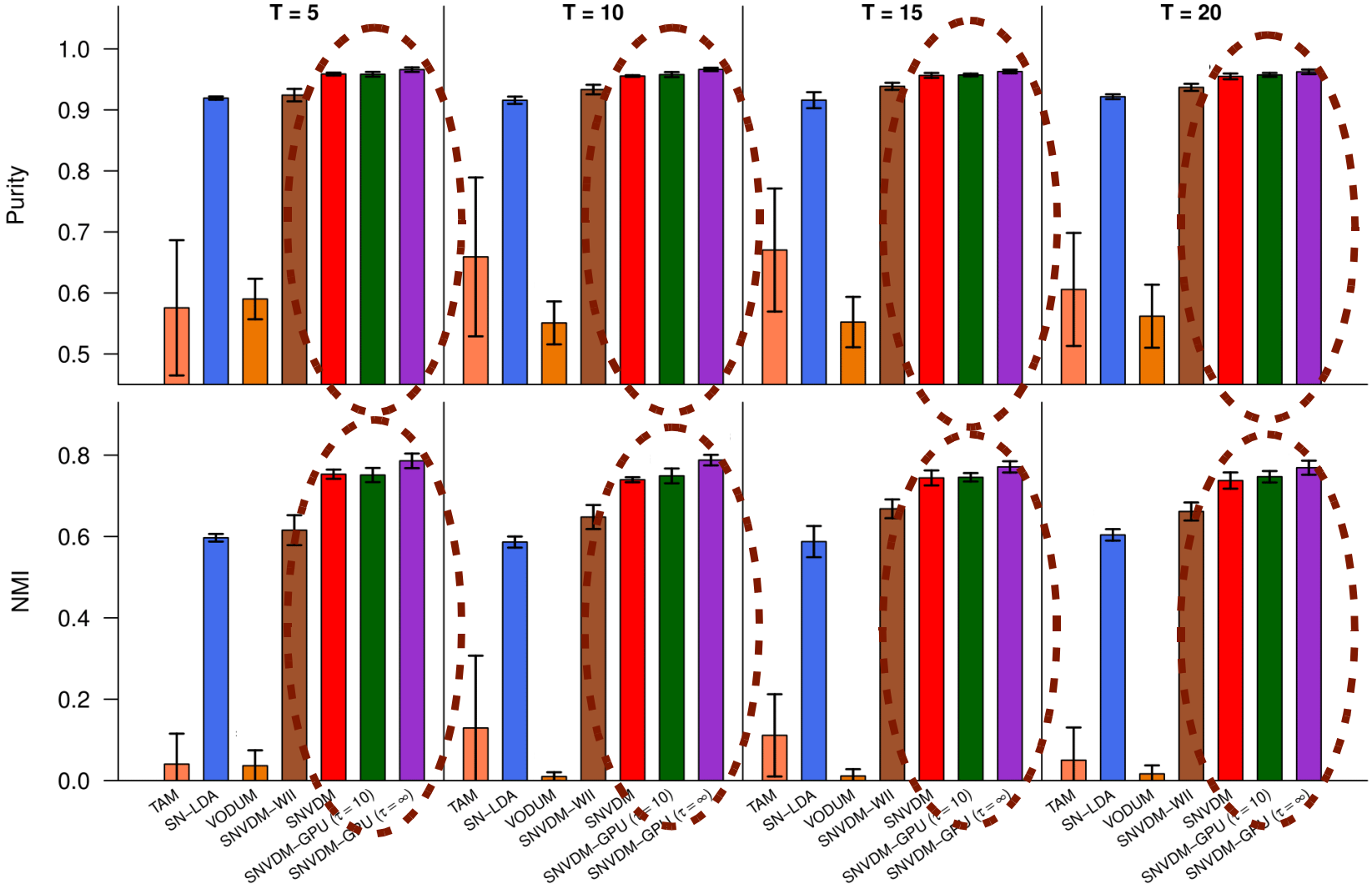

# Evaluation: Viewpoint Clustering

**Clustering** of users' viewpoints on **Midterms** in terms of **Purity** and **NMI** (error bars = 95% CI)

Observation 4: similar trends on **Midterms** but greater improvement for our models over baselines

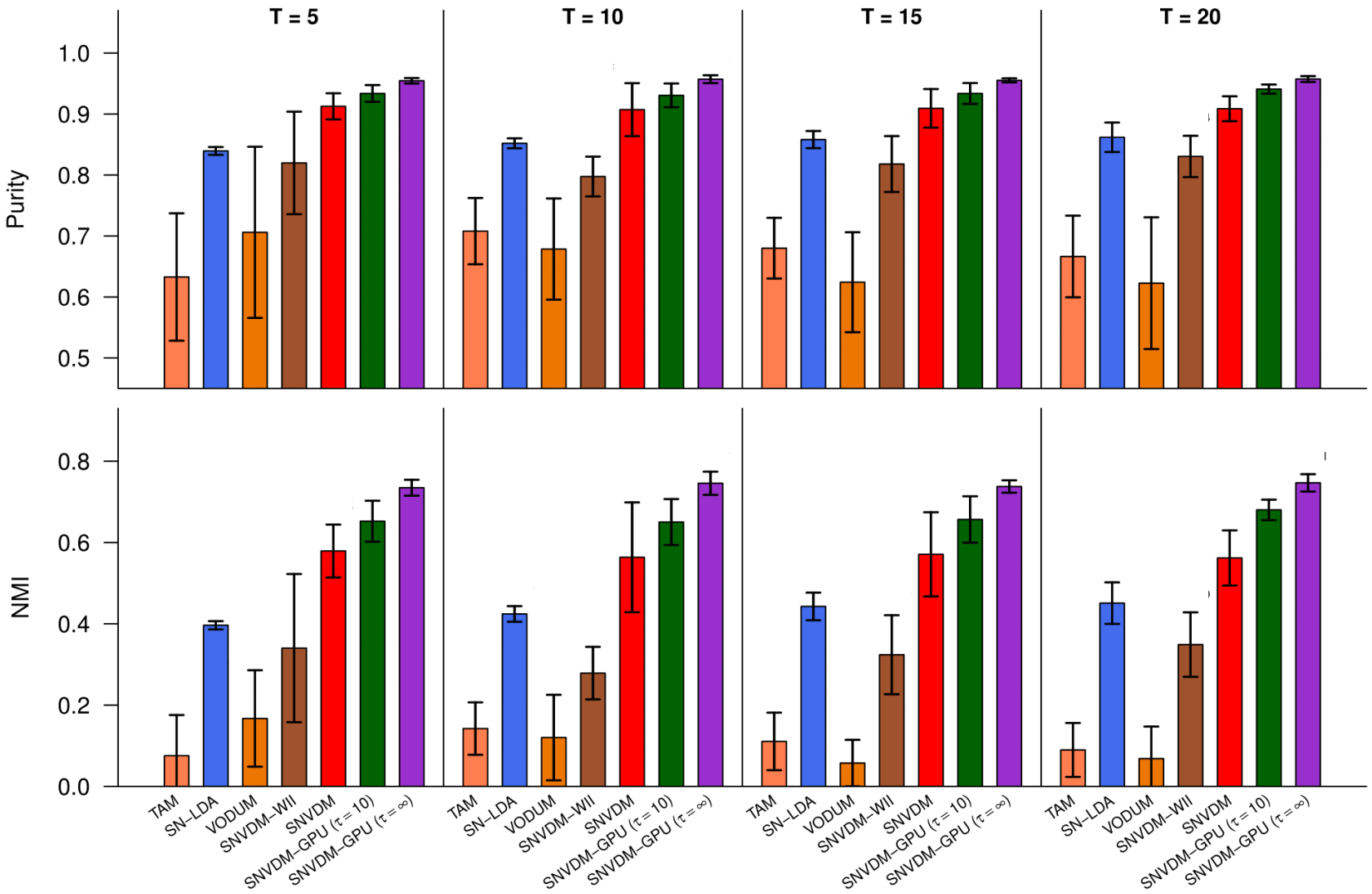

# Evaluation: Impact of Social Network Sparsity

**Clustering** of users' viewpoints on **Indyref** for different degrees of network sparsity (T = 10)

Observation: performance degraded for **lower percentage of interactions**

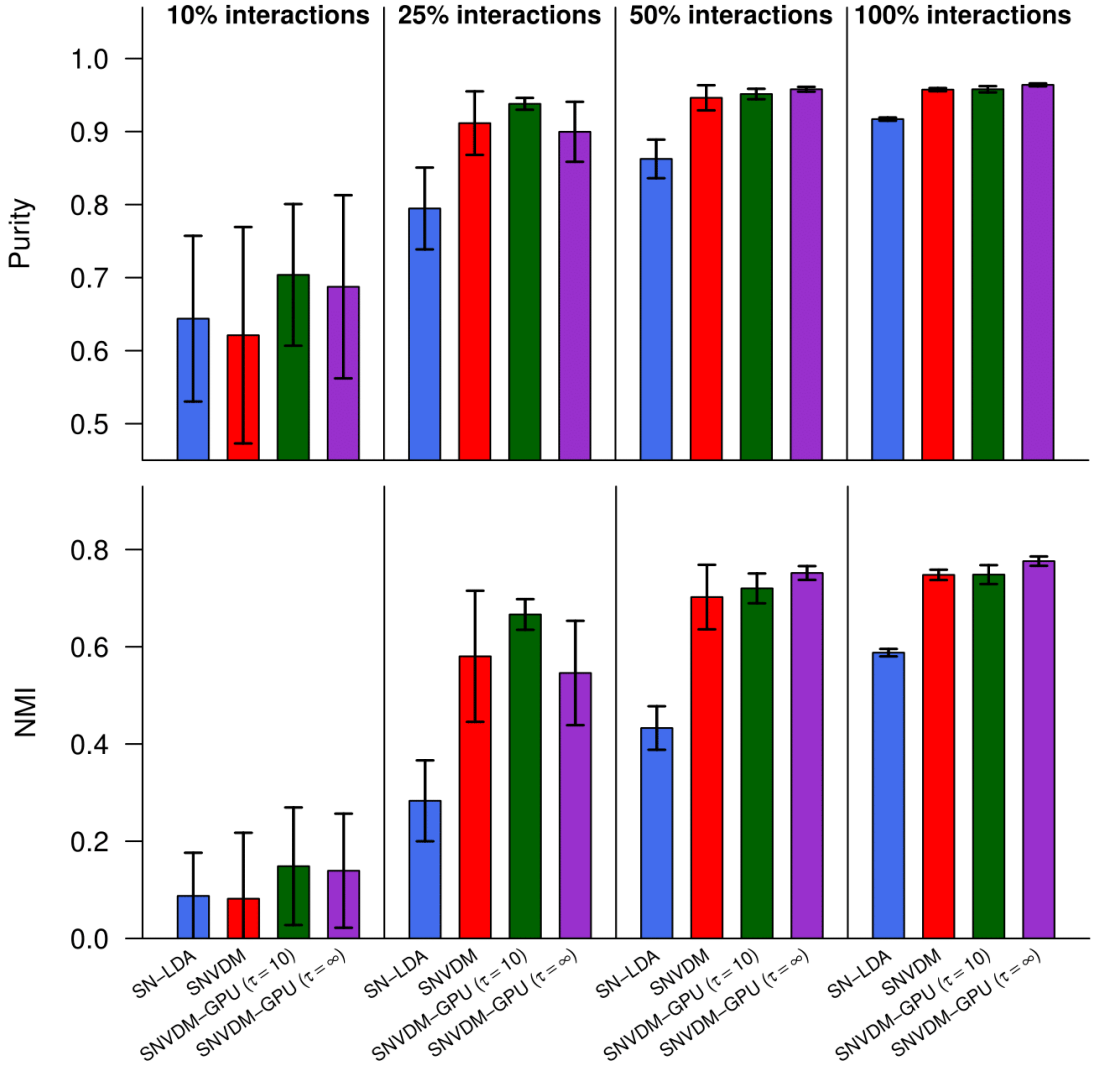

# Evaluation: Qualitative Analysis

Most probable **topic words** and **viewpoint-topic words** for topics from Indyref and Midterms

| Topic: *Scottish independence* | | |
|---|---|---|
| Neutral | Viewpoint: *Yes* | Viewpoint: *No* |
| **#indyref** | **#voteyes** | #indyref |
| scotland | yes | uk |
| independence | scotland | salmond |
| **vote** | independence | **#bettertogether** |
| **campaign** | westminster | #scotdecides |
| scottish | vote | separation |
| uk | independent | currency |
| people | country | thanks |
| future | **#yes** | today |
| independent | #scotland | say |

| Topic: *Energy and resources* | | |
|---|---|---|
| Neutral | Viewpoint: *Dem.* | Viewpoint: *Rep.* |
| energy | **#actonclimate** | **#4jobs** |
| house | climate | #obamacare |
| new | #p2 | #jobs |
| gas | change | gop |
| natural | **#climatechange** | obama |
| #energy | clean | **bills** |
| #ff | oil | jobs |
| #kxl | energy | **house** |
| support | #gop | act |
| economic | seec | watch |

- Reasonable **coherence** of topic words and viewpoint-topic words
- Topic words indeed **unbiased** towards any viewpoints
- Use of viewpoint-specific **hashtags** and mention of different issues for different viewpoints

# Conclusion and Research Directions

- **SNVDM(-GPU)**: models to jointly discover viewpoints and topics in social networks, leveraging both **posted text content** and **social interactions**

  Take-home message: **social interactions** are key for viewpoint discovery in social networks!

- What's next?
  - Integrate **time dimension** and **geolocation**, e.g., to analyze candidate support during elections
  - Design a **viewpoint summarization** framework to provide Internet users with **more diversified content** and thus mitigate the filter bubble and echo chamber phenomenon

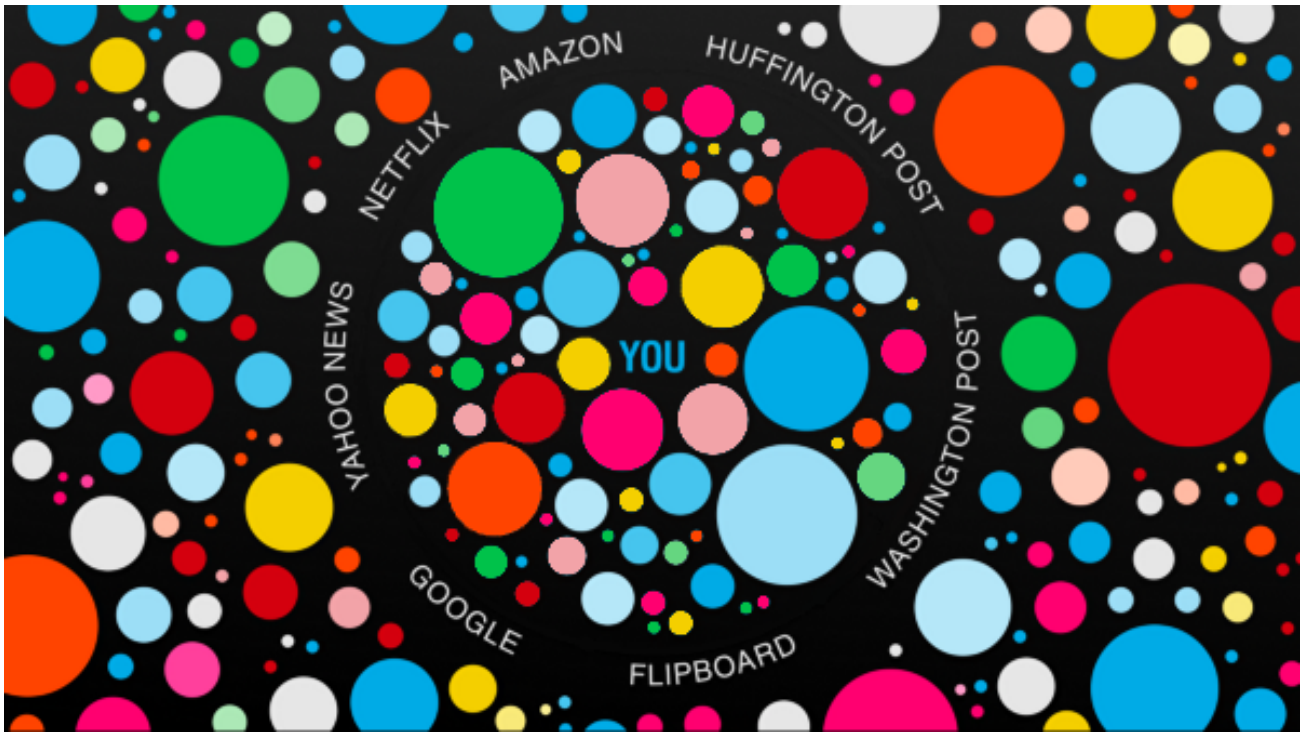

# Acknowledgments & Questions

Thanks **SIGIR**, **SIGWEB** and the **US NSF** for providing travel grants!

## Questions?

**@tthonet**

**thonet@irit.fr**

**@gcabanac**

**cabanac@irit.fr**

**@MohBoughanem**

**boughanem@irit.fr**

**@karenatw**

**sauvagnat@irit.fr**

Code and data available at: `https://github.com/tthonet/SNVDM`

# References


- Brigadir, I., Greene, D., & Cunningham, P. (2015). Analyzing Discourse Communities with Distributional Semantic Models. In Proc. of WebSci ’15.
- Newman, D., Asuncion, A., Smyth, P., & Welling, M. (2009). Distributed Algorithms for Topic Models. J. Mach. Learn. Res., 10, 1801–1828.
- Pariser, E. (2011). The Filter Bubble: What the Internet Is Hiding from You. The Penguin Press.
- Paul, M. J., & Girju, R. (2010). A Two-Dimensional Topic-Aspect Model for Discovering Multi-Faceted Topics. In Proc. of AAAI ’10 (pp. 545–550).
- Sachan, M., Dubey, A., Srivastava, S., Xing, E. P., & Hovy, E. (2014). Spatial Compactness meets Topical Consistency: Jointly Modeling Links and Content for Community Detection. In Proc. of WSDM ’14 (pp. 503–512).
- Sunstein, C. R. (2009). Republic.com 2.0. Princeton University Press.
- Thonet, T., Cabanac, G., Boughanem, M., & Pinel-Sauvagnat, K. (2016). VODUM: A Topic Model Unifying Viewpoint, Topic and Opinion Discovery. In Proc. of ECIR ’16 (pp. 533–545).

# Appendix: Baseline SNVDM-WII

Ablated version of SNVDM: **SNVDM-WII** (without incoming interactions)

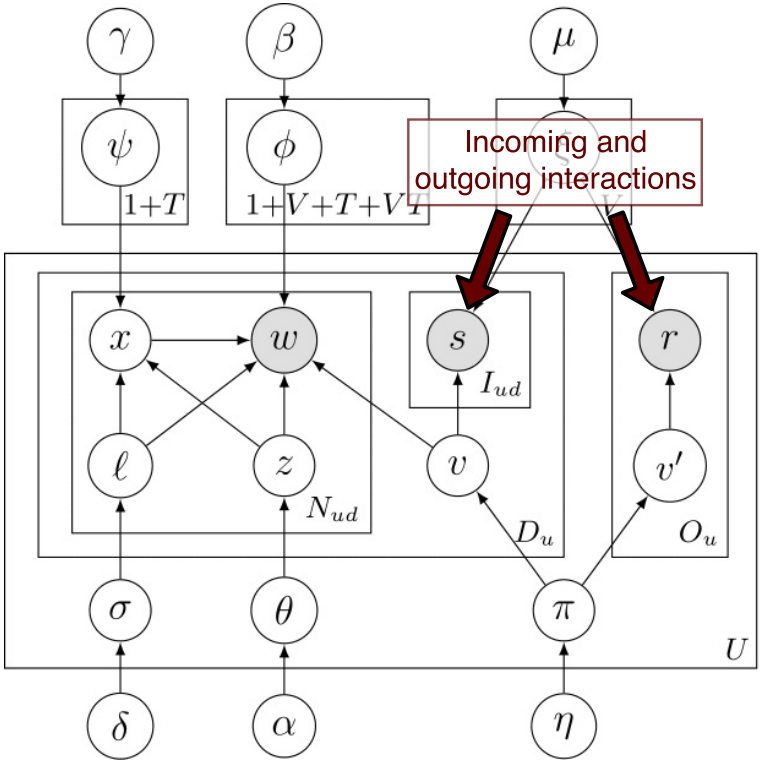


**SNVDM** vs . . .

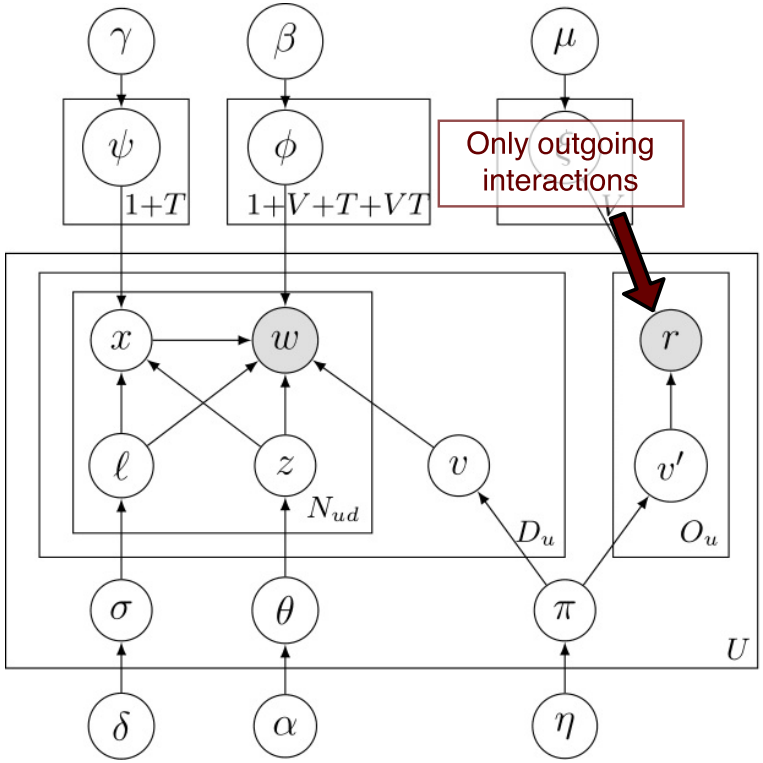


. . . **SNVDM-WII**

# Appendix: Execution Time

Execution time (in seconds) of one Gibbs sampling iteration on Indyref (with $T = 10$) and Midterms (with $T = 15$)

| | Indyref | Midterms |
|---|---|---|
| TAM | 1.45 | 0.87 |
| SN-LDA | 1.18 | 0.64 |
| VODUM | 2.78 | 1.85 |
| SNVDM-WII | 2.08 | 1.08 |
| SNVDM | 2.49 | 1.15 |
| SNVDM-GPU ($\tau = 10$) | 3.47 | 1.34 |
| SNVDM-GPU ($\tau = \infty$) | 14.67 | 2.56 |

# Appendix: Simple Pólya Urn Scheme

The compound **Dirichlet-Multinomial** distribution (used in LDA-based topic models) can be interpreted as an **urn sampling metaphor** with an **over-replacement** policy

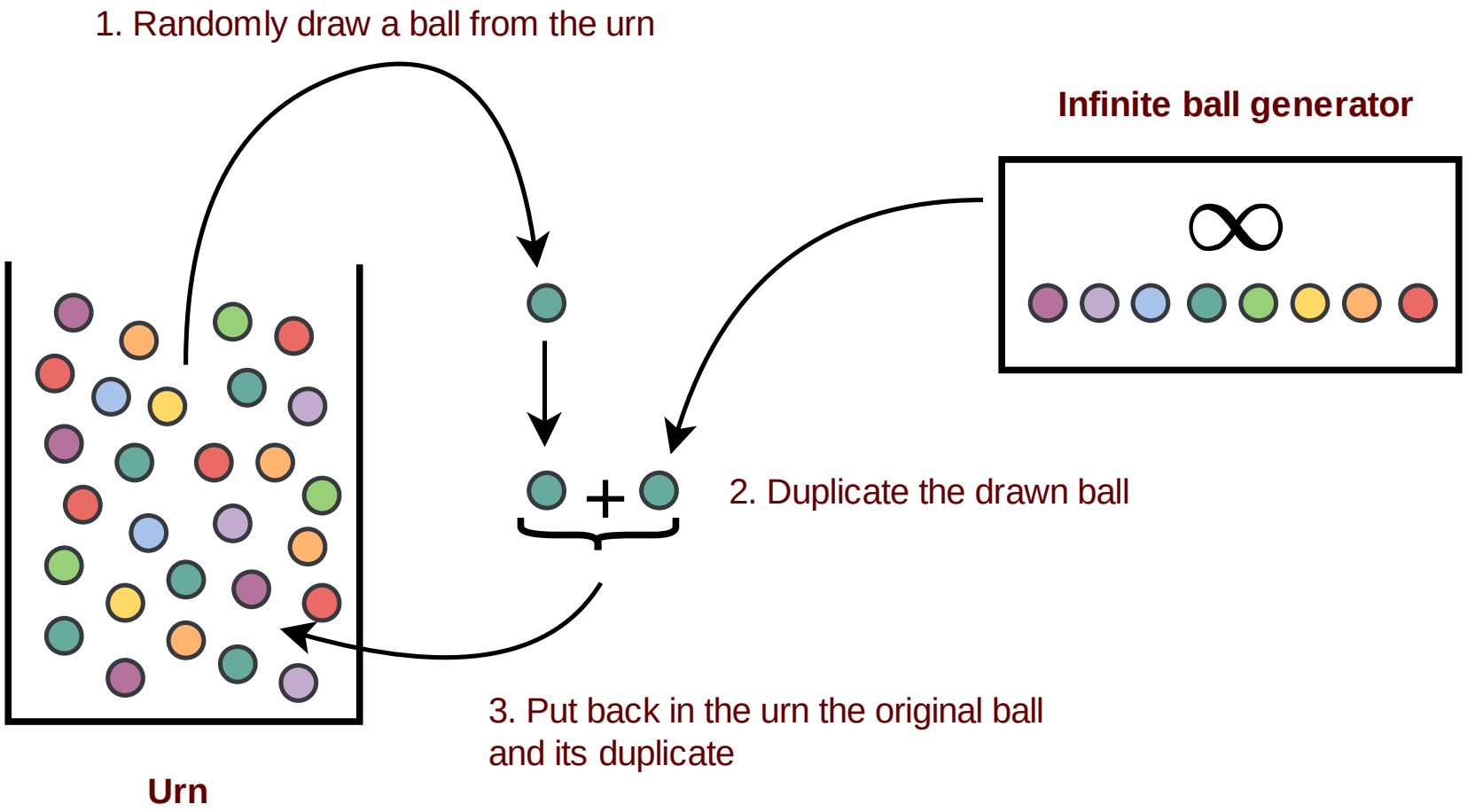

# Appendix: Generalized Pólya Urn Scheme

The Simple Pólya Urn scheme can be generalized by modifying the replacement rule to **exploit similarities between balls' colors** [Mahmoud, 2008]

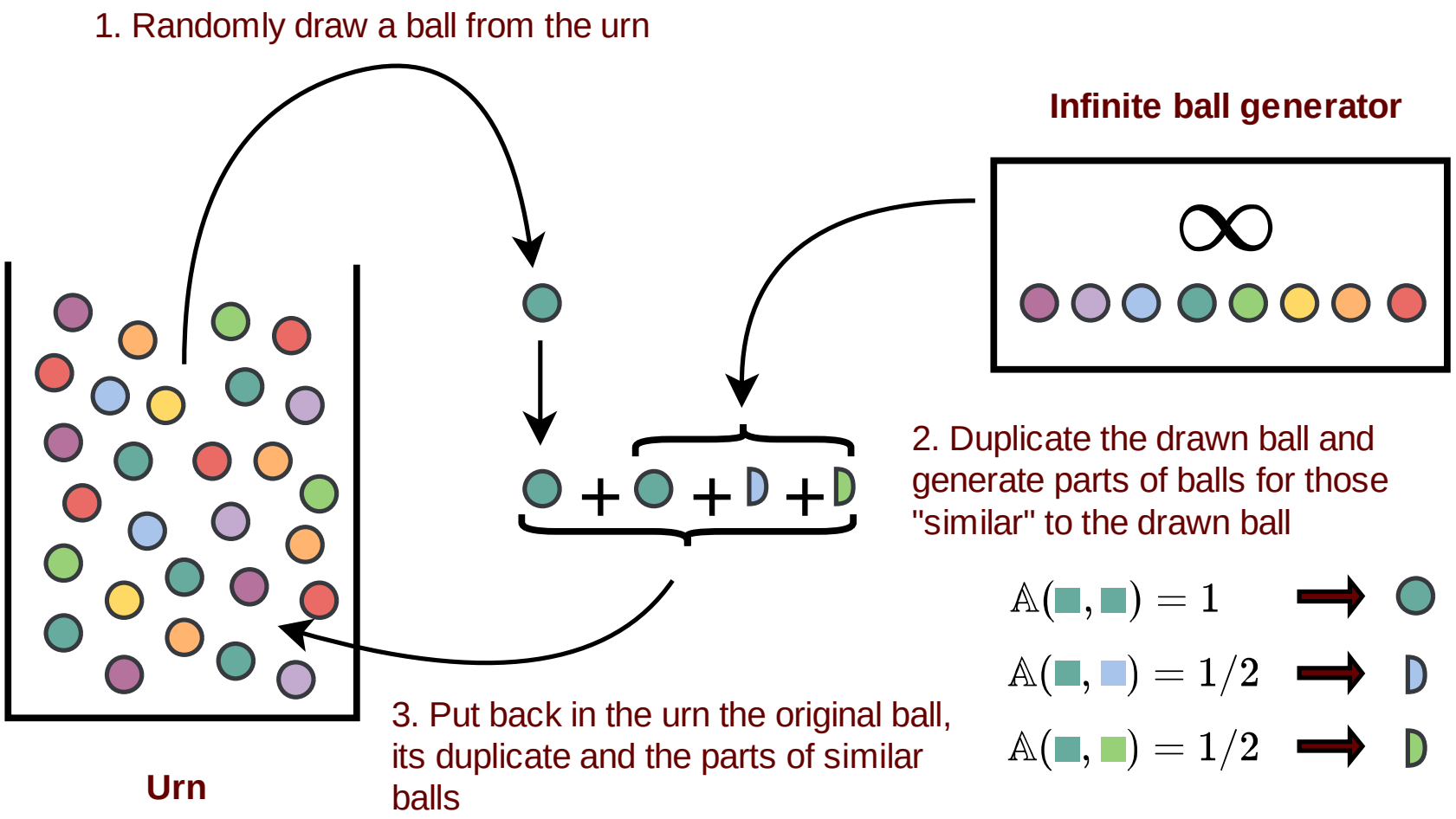

# Appendix: SNVDM-GPU

Using **Generalized Pólya Urn** in SNVDM requires minor changes in collapsed Gibbs sampling

E.g., for outgoing interaction $o$ from user $u$ on user $u'$:

$$p(v'_{uo} = v | r_{uo} = u', \text{rest}) \propto \frac{n_{uv} + \eta \frac{1}{V}}{n_{u\bullet} + \eta} \cdot \frac{\boldsymbol{n_{vu'}} + \mu \frac{1}{U}}{\boldsymbol{n_{v\bullet}} + \mu}$$

**SNVDM** vs . . .

$$p(v'_{uo} = v | r_{uo} = u', \text{rest}) \propto \frac{n_{uv} + \eta \frac{1}{V}}{n_{u\bullet} + \eta} \cdot \frac{\sum_{\boldsymbol{u''=1}}^{\boldsymbol{U}} \mathbb{A}_{\boldsymbol{u''u'}} \boldsymbol{n_{vu''}} + \mu \frac{1}{U}}{\sum_{\boldsymbol{u''=1}}^{\boldsymbol{U}} \mathbb{A}_{\boldsymbol{u''\bullet}} \boldsymbol{n_{vu''}} + \mu}$$

. . . **SNVDM-GPU**

The **addition matrix** $\mathbb{A}$ defines the **weight** to put on count $n_{vu''}$ for each $u''$:

$$\mathbb{A}_{u'u''} = \begin{cases} 1 & \text{if } u' = u'', \\ \lambda & \text{if } u'' \text{ is among } \textbf{top } \boldsymbol{\tau} \textbf{ acquaintances} \text{ of } u', \\ 0 & \text{otherwise} \end{cases}$$

with $0 \leq \lambda \leq 1$ ($\lambda = 0 \implies$ "vanilla" SNVDM) and $\tau \in \mathbb{N}$